F240AA Pneumatic Airflow Switch

Installation Instructions

Part No. 24-7664-3124, Rev. A
Issued October 15, 2015

Refer to the QuickLIT website for the most up-to-date version of this document.

Applications

IMPORTANT: Use this F240AA Pneumatic Airflow Switch only as an operating control. Where failure or malfunction of the F240AA switch could lead to personal injury or property damage to the controlled equipment or other property, additional precautions must be designed into the control system. Incorporate and maintain other devices, such as supervisory or alarm systems or safety or limit controls, intended to warn of or protect against failure or malfunction of the F240AA switch.

IMPORTANT: Utiliser ce F240AA Type Pneumatic Airflow Switch uniquement en tant que dispositif de régulation. Lorsqu'une défaillance ou un dysfonctionnement du F240AA switch l risque de provoquer des blessures ou d'endommager l'équipement contrôlé ou un autre équipement, la conception du système de contrôle doit intégrer des dispositifs de protection supplémentaires. Veiller dans ce cas à intégrer de façon permanente d'autres dispositifs, tels que des systèmes de supervision ou d'alarme, ou des dispositifs de sécurité ou de limitation, ayant une fonction d'avertissement ou de protection en cas de défaillance ou de dysfonctionnement du F240AA switch.

The F240AA Pneumatic Airflow Switch detects airflow or the absence of airflow by responding only to the velocity of air movement within a duct.

Absence of airflow during the normal operation of air handling systems may cause overheating, coil icing, or other conditions that may be detrimental to the equipment.

Typical applications include:

- make-up air systems
- air cooling or heating processes
- exhaust systems

The switch features a Type 3R (NEMA)/IP43 enclosure with an integral mounting plate and a mounting gasket. It is calibrated for a maximum pneumatic input pressure of 20 psig (138 kPa).

For a typical application installation for the F240AA Pneumatic Airflow Switch, see Figure 1.

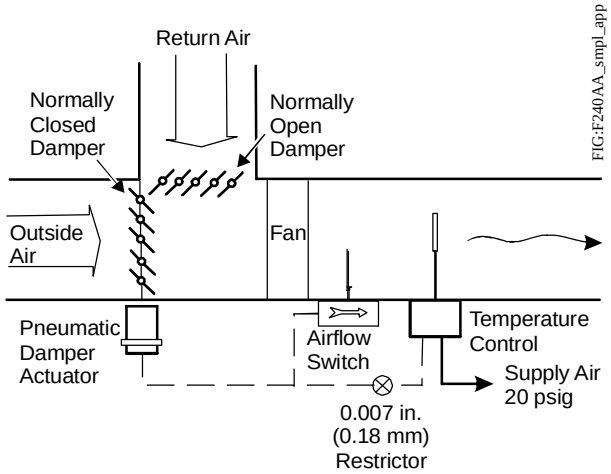

Figure 1: Typical Application Installation for the F240AA Pneumatic Airflow Switch

Installation

Dimensions

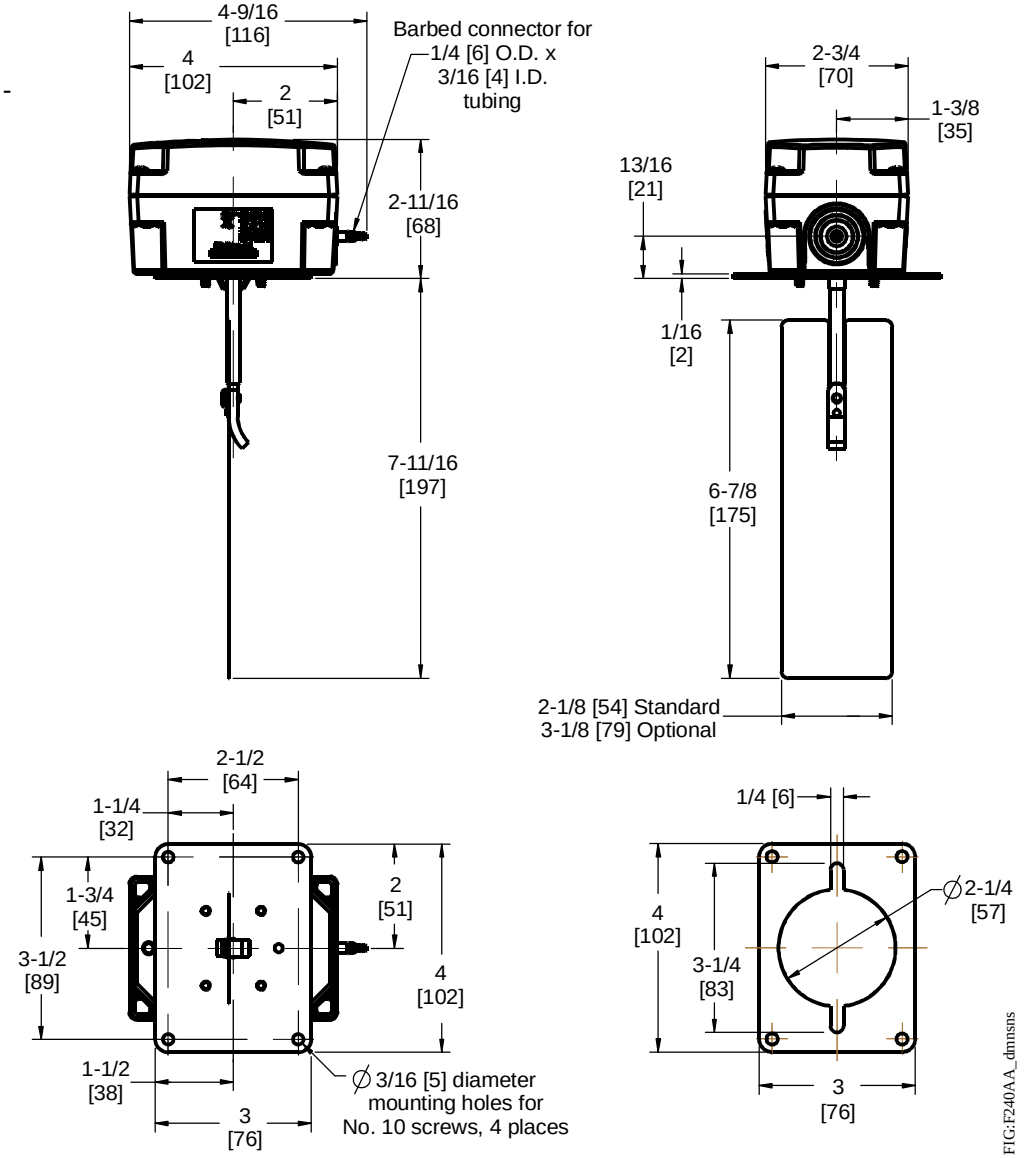

Figure 2: F240AA Airflow Switch with Type 3R (NEMA)/IP43 Enclosure Dimensions, in. [mm]

Installation Procedure

Select the proper location and orientation. See *Mounting*.

1. Use the mounting plate gasket as a template and mark hole positions.
2. Drill or punch screw holes.
3. Cut the center hole large enough for the paddle to pass through.
4. Trim the paddle, if necessary (see Figure 3). The standard paddle fits into ducts of 3 x 8 in. (76 x 203 mm) minimum. The paddle may be trimmed for installing in ducts as small as 3 x 6 in. (76 x 152 mm).

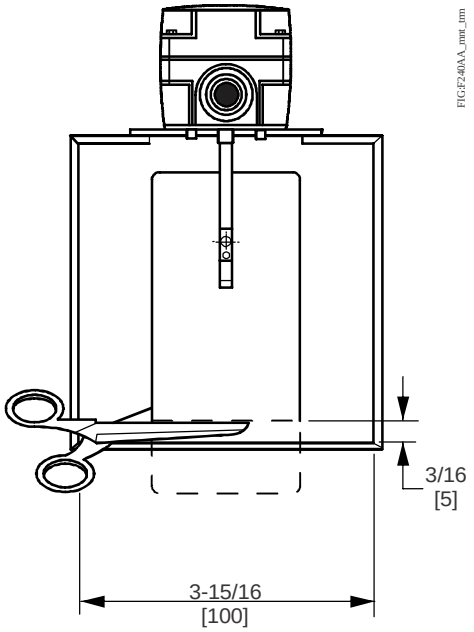

Figure 3: Trimming the Paddle, Dimensions, in. [mm]

Mounting

IMPORTANT: Mount the switch so that the housing is level horizontally (or plumb vertically). Use a shim, if necessary.

- Install the switch so that the cover and interior are accessible for adjustment.
- Ensure that the arrow on the side of the switch body points in the direction of flow.
- Mount the F240AA switch on the top, side, or bottom of a duct.
- Mount the switch in a horizontal duct whenever possible. In a horizontal duct, the switch housing must be level, and the paddle should be at approximately a right angle to the airflow (Figure 4).
- When mounting the switch in a horizontal duct that is not horizontally true, check with a level and place a shim under the switch mounting plate. Do not mount the switch without a shim (Figure 5).
- When mounting the switch in a vertical duct where the airflow is upward (Figure 6), see Table 2 for the minimum flow required to actuate the switch. The maximum air velocity should not exceed 2,000 FPM (10.16 m/s).

Note: When the switch is mounted in a vertical duct, the values shown in Figure 10 do not apply.

- When mounting the switch in a vertical duct where the airflow is downward (Figure 6), you must readjust the minimum flow required to actuate the switch (see *Setup and Adjustments* on page 4).

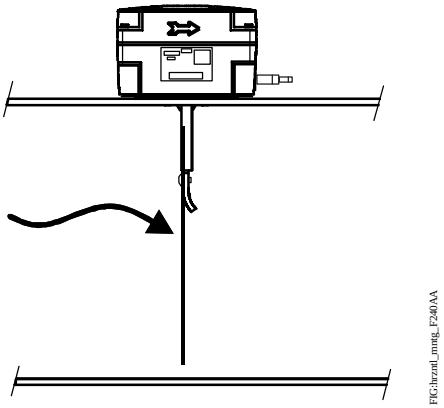

Figure 4: Mounting the F240AA Switch in a Horizontal Duct

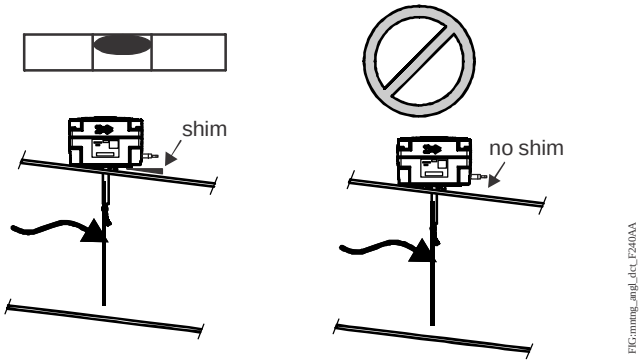

Figure 5: Mounting the F240AA Switch in an Angled Duct

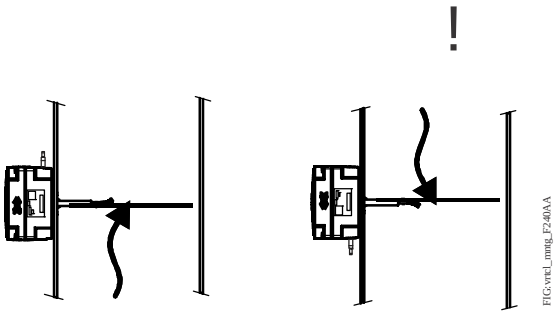

Figure 6: Mounting the F240AA Switch in a Vertical Duct

Location Considerations

IMPORTANT: Mount the switch so that the housing is level horizontally (or plumb vertically). Use a shim, if necessary.

Do not use this switch where it is exposed to outdoor weather. The switch is designed specifically for indoor use.

Avoid locations close to elbows, dampers, fans, duct openings, or other areas where excessive turbulence occurs.

Mount the switch away from such areas at least five times the distance of the smallest duct dimension (Figure 7).

Example: On a 3 in. × 8 in. duct, mount the F240AA switch at least 15 in. (381 mm) from the nearest bend.

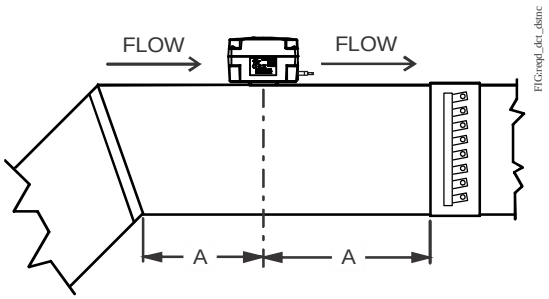

Dimension A must be at least five times the distance of the smallest duct dimension.

Figure 7: Required Duct Distance

The standard paddle fits into ducts of 3 x 8 in. (76 x 203 mm) minimum. The paddle may be trimmed for installing in ducts as small as 3 x 6 in. (76 x 152 mm).

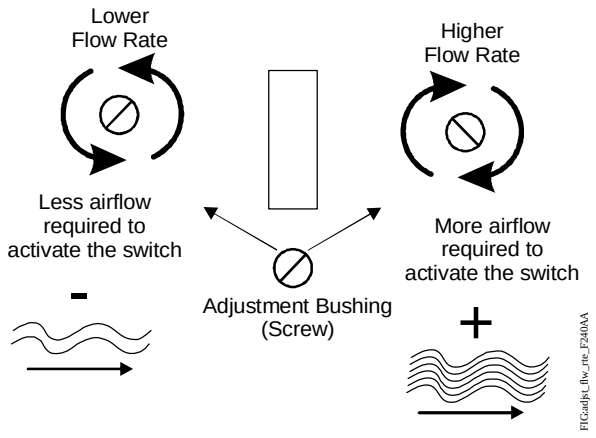

Figure 8: Flow Rate Adjustment

Setup and Adjustments

CAUTION: Risk of Property Damage.
Do not set the switch lower than the factory setting. The switch is factory set at approximately the minimum flow rate. A lower setting may result in the switch failing to return to a no-flow position which may result in damage to the controlled equipment or other property.

MISE EN GARDE : Risque de dégâts matériels.
Ne pas régler le commutateur sur une valeur inférieure au paramètre d'usine. Le commutateur est réglé en usine sur une valeur correspondant environ au débit minimum. Un réglage sur une valeur inférieure risque d'empêcher le commutateur de revenir sur une position « aucun-débit », ce qui risque d'endommager l'équipement contrôlé ou de provoquer d'autres dégâts matériels.

CAUTION: Risk of Property Damage.
Do not attempt to change sealed settings (screws sealed with Threadlock®). Attempted adjustment may damage the switch or cause loss of calibration or other property damage.

MISE EN GARDE : Risque de dégâts matériels.
Ne pas essayer de modifier la position des éléments de réglage bloqués (vis identifiées par de la peinture noire). Toute tentative de réglage risque d'endommager le dispositif de contrôle ou de provoquer la perte des valeurs d'étalonnage ou d'autres dégâts matériels.

To adjust the setting of the flow switch:

1. Remove the enclosure cover.
2. Adjust the switch's flow rate (Figure 8):
   - Turn the adjustment screw **counterclockwise** to **lower** the flow rate required to activate the switch.
   - Turn the adjustment screw **clockwise** to **raise** the flow rate required to activate the switch.

   Note: Do not lower the flow rate required to activate the switch, unless the flow rate required to activate the switch was raised from the factory-set flow rate.

3. Replace the enclosure cover and tighten the cover screws with 10 to 12 in·lb of torque.

Verification

To verify that the flow rate is set above the factory minimum, depress the main lever (see Figure 9) multiple times.

If the lever fails to operate the switch upon return at any time, the flow rate is set below the factory-set minimum.

Turn the adjustment screw **clockwise** to **raise** the flow rate required to activate the switch. See Figure 8.

Operation

The pneumatic airflow switch responds to pressure exerted on the flow paddle by the velocity of air movement within a duct. The control port closes on increasing flow and opens on decreasing flow. See Table 1 for switch action.

Table 1: Switch Action

Airflow Action	Switch Action
Increasing Flow	Closes
Decreasing Flow	Opens

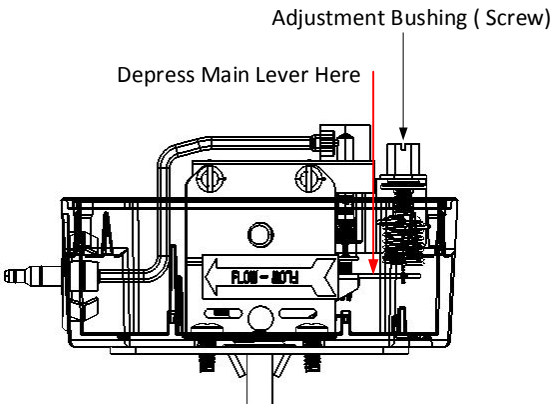

Figure 9: Minimum Adjustment

Table 2 and Figure 10 show airflow velocities in FPM required to activate the switch for any given duct size (horizontal or vertical upward flow). The flow rate is based on a standard air density of 0.075 lb/ft^3 [1.2 kg/m^3]. The switch is factory-set at the minimum flow rate shown in Figure 10.

Table 2: Flow Rate Table, FPM (m/second)

Paddle Width	Switch Actuation on Flow	Minimum Air Velocity Required to Activate Control			
		Horizontal Flow		Vertical Flow	
		50 in.^{2} (323 cm^2) or Larger Duct Area	Less Than 50 in.^{2} (323 cm^2) Duct Area	50 in.^{2} (323 cm^2) or Larger Duct Area	Less Than 50 in.^{2} (323 cm^2) Duct Area
2-1/8 in.	**Increasing Flow (Close)**	625 (3.2)	575 (2.9)	950 (4.8)	750 (3.8)
	Decreasing Flow (Open)	325 (1.7)	220 (1.1)	850 (4.3)	575 (2.9)
3-1/8 in.	**Increasing Flow (Close)**	500 (2.5)	350 (1.8)	750 (3.8)	500 (2.5)
	Decreasing Flow (Open)	250 (1.3)	100 (0.5)	650 (3.3)	350 (1.8)

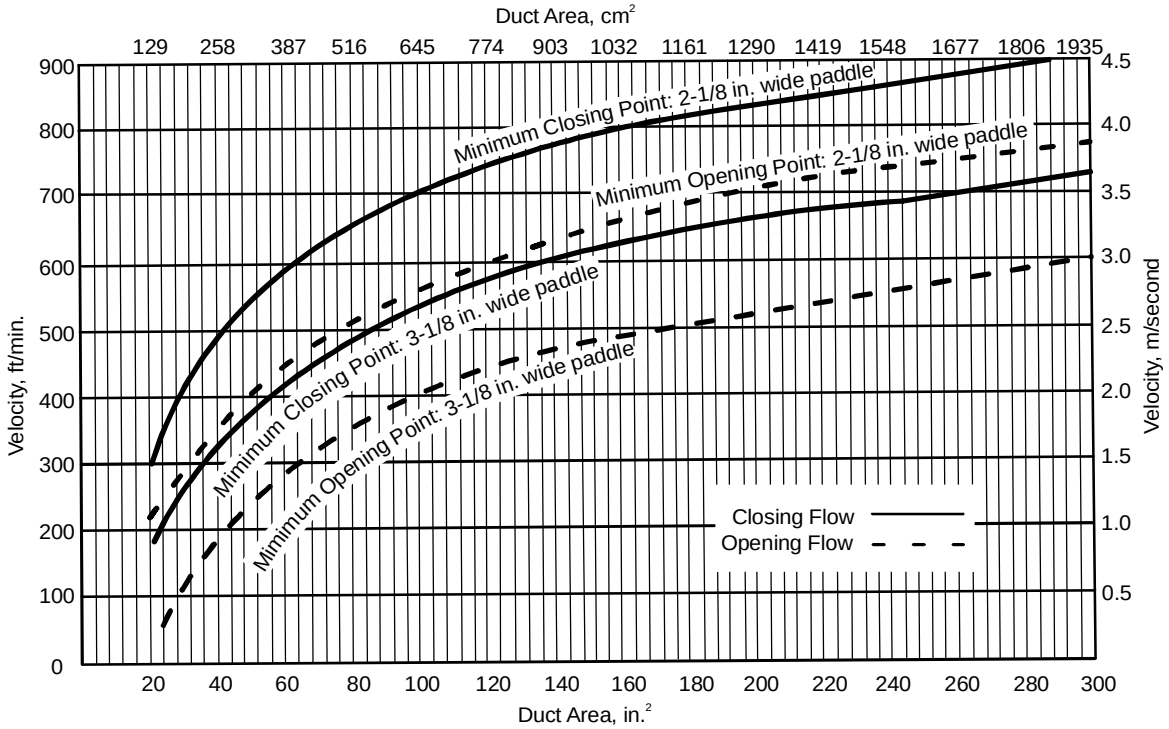

Figure 10: Flow Rate Curve for an F240AA Switch Mounted in a Horizontal Duct

Checkout Procedure

Before you leave the installation, observe at least three complete operating cycles to be sure that all components are functioning correctly.

Repair Information

Do not make field repairs, except for replacement of the flow paddle. For a replacement control or paddle kit, contact the nearest Johnson Controls/PENN distributor. For more information, contact Johnson Controls/PENN® application engineering at 1-800-275-5676 or 1-414-524-5535.

Ordering Information

Table 3: F240AA Pneumatic Airflow Switch

Product Code Number	Description
F240AA-01C	Pneumatic airflow switch with Type 3R (NEMA)/IP43 enclosure, 2-1/8 in. wide x 6-7/8 in. long (54 mm x 175 mm) paddle installed and a 3-1/8 in. wide x 6-7/8 in. long (79 mm x 175 mm) paddle supplied.

Table 4: Replacement Paddle Kits

Product Code Number	Description
PLT112-1R	2-1/8 in. wide x 6-7/8 in. long (54 mm x 175 mm) paddle
PLT112-2R	3-1/8 in. wide x 6-7/8 in. long (79 mm x 175 mm) paddle

Technical Specifications

F240AA Pneumatic Airflow Switch

Switch	Pneumatic
Ambient Operating Temperature	32 to 140°F (0 to 60°C)
Duct Air Temperature	32 to 104°F (0 to 40°C)
Maximum Air Velocity	2,000 FPM (10.16 m/sec)
Enclosure	Type 3R (NEMA)/IP43, polycarbonate
Paddle Material	0.006 in. (0.15 mm) stainless spring steel
Pneumatic Switch Action	Closes on increasing flow, opens on decreasing flow
Tubing Connector	Barb fitting for 1/4 in. O.D. plastic tubing
Shipping Weight	1.3 lb (0.6 kg)

The performance specifications are nominal and conform to acceptable industry standards. For application at conditions beyond these specifications, consult Johnson Controls/PENN Refrigeration Application Engineering at 1-800-275-5676. Johnson Controls, Inc. shall not be liable for damages resulting from misapplication or misuse of its products.

Building Efficiency
507 E. Michigan Street, Milwaukee, WI 53202

Johnson Controls/PENN® and Johnson Controls® are registered trademarks of Johnson Controls, Inc. in the United States of America and/or other countries. All other trademarks used herein are the property of their respective owners. © Copyright 2015 by Johnson Controls, Inc. All rights reserved.